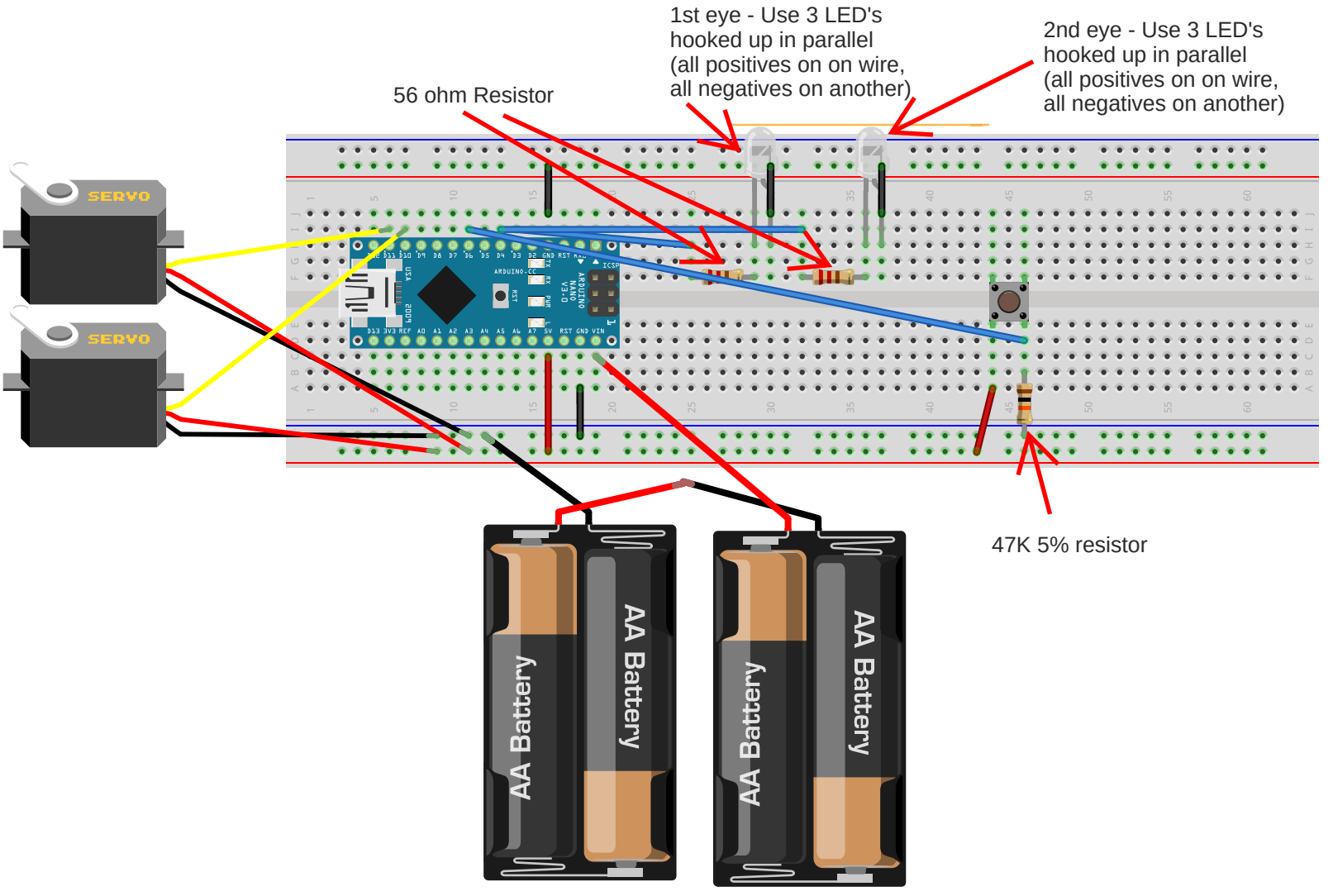
1st eye - Use 3 LED's hooked up in parallel (all positives on on wire, all negatives on another)
2nd eye - Use 3 LED's hooked up in parallel (all positives on on wire, all negatives on another)
56 ohm Resistor
47K 5% resistor
SERVO
SERVO
AA Battery
AA Battery
AA Battery
AA Battery
fritzing